ACCSYS TECHNOLOGIES GLOBAL ASSESSMENT FOR PART Q COMPLIANCE OF ACCOYA WINDOWS AND DOORS.

accoya®

BRITISH WOODWORKING FEDERATION

To enable building regulation Part Q compliancy, Accsys Technologies in collaboration with UKAS approved test houses of window and door manufacturers, ancillary suppliers to our industry and the BWF Federation has developed a security global assessment.

This document allows for the successful security testing of Accoya® windows and doors to be cascaded down to window and door manufacturers, thus limiting the need for further testing.

THE NEW SECURITY REQUIREMENTS FOR THE BUILDING REGULATIONS IN ENGLAND.

REQUIREMENT Q1

"Requirement Q1" refers specifically to Part Q of Schedule 1 of the Building Regulations, which states:

Reasonable provision must be made to resist unauthorised access to—

a) any dwelling; and

b) any part of a building from which access can be gained to a flat within the building.

Requirement Q1 applies to newly constructed dwellings, and any extensions to new dwellings to which Requirement Q1 applied, and covers "easily accessible doors and windows" which provide access into;

a) A dwelling from outside

b) Parts of a building containing flats from outside

c) A flat from the common parts of the building.

An easily accessible door or windows is;

a) A doorset or window any part of which is within 2m vertically of an accessible surface such as the ground or basement level, or an access balcony, or

b) A window within 2m vertically of a flat or sloping roof (with a pitch of less than 30 degrees) that is within 3.5m of ground level.

It is possible that at times Building Control Inspectors may apply their judgement to which doorsets and windows will be considered vulnerable.

If a garage has an interconnecting doorset allowing access into the dwelling then either the garage doorset or the interconnecting doorset should be a secure doorset. If the garage does not have an interconnecting doorset then the garage doorset does not need to be a secure doorset.

Approved Document Q

https://www.gov.uk/government/publications/security-in-dwellings-approved-document-q

Approved Document Q sets out what, in ordinary circumstances, may be accepted as reasonable provision for compliance with requirement Q1. If you follow the guidance in Approved Document Q there will generally be a presumption of compliance with Requirement Q1.

As with all Building Regulations, however, there is no obligation to adopt any particular solution contained in an Approved Document. These are provided as guidance only. If you assert that you meet requirement Q1 in some other way then you should discuss this with the relevant building control body.

SHARED OR CASCADED TEST EVIDENCE.

To demonstrate compliance with Requirement Q1 and to show that doorsets and windows are
"secure", test evidence can be shared between organisations or cascaded (passed down) from one organisation to another. In this document, Accsys are making test evidence available to support the use of Accoya in the production of secure doors and windows by providing the specification of products successfully tested to PAS 24. Approved Document Q states that a secure doorset or window can be proven to be secure if it is, "a product designed and constructed in accordance with a specification or design shown by test to be capable of meeting the required performance."

Care should be taken to ensure that the evidence passed on in this document applies to the product being manufactured and remains reliable (i.e. the product manufactured follows any specification requirements laid out in the scope of the test evidence). There has been a precedent set by appendix B in Approved Document Q whereby there is some flexibility given in the exact profiles of timber to be used. Appendix B refers to minimum section requirements giving dimensions for thickness and for the section remaining after machining. Following this lead, any profiles used should be at least as thick as those used in the test and should similarly retain at least the minimum section after machining as those used in the test.

Only the hardware specified should be fitted. The result of the test can only be assumed for the specific hardware used. Multipoint locks, keeps, hinges and hinge protection are vital to the performance of the product and these should be fixed using the screws specified and all fixing points should be prepared with a pilot hole. Forcing screws directly into the Accoya, as with any timber, will initiate splitting thus reducing the robustness of the doorset or window. Not all glazing methods will meet the rigours of PAS 24 testing and so, again, it is important to use the materials specified in the test reports.

GLAZING REQUIREMENTS

Where doorsets contain glass, each glazed area shall include at least one pane of laminated glass meeting the requirements of BS EN 356:2000, Class P1A, and be glazed in accordance with BS 6262.

Where windows contain glass and non key unlocking hardware, each glazed area shall include at least one pane of laminated glass meeting the requirements of BS EN 356:2000, Class P1A, and be glazed in accordance with BS 6262.

ACCOYA VERSUS REDWOOD. STRENGTH AND SCREW RETENTION.

Where test evidence is available for doorsets or windows manufactured in Redwood (Pinus Sylvestris) the laboratory may be willing to assess the same design for manufacture in Accoya. The table below shows the comparative strength characteristics for Accoya, redwood and western hemlock. For both modulus of rupture and modulus of elasticity, and for screw holding capacity, Accoya is shown to have a superior performance compared to that of redwood.

Table 1 – Comparison of strength and screw retention.

Property	Accoya		Scots pine		Western Hemlock
Modulus of rupture MoR (N/mm^2)	102.0		74.0 [1] 83.0 [2]		77.9.0 [3]
Modulus of elasticity MoE (N/mm^2)	11.06×10^3 [4]		9.02×10^3 [1] 10.08×10^3 [2]		11.24×10^3 [3]
Screw holding capacity (kN) [5]	Screw type 1	Screw type 2	Screw type 1	Screw type 2	
Radial Tangential Axial	2.26 1.99 1.90	1.96 1.75 1.44	1.74 1.67 1.38	1.48 1.50 0.97	

Notes to Table 1.

[1] https://www.ncsu.edu/bioresources/BioRes_08/ BioRes_08_2_1634_Hassan_HT_Eval_Stiffness_Pine _Wood_Freq_Ultrasonic_3549.pdf

[2] http://www.wood-database.com/scots-pine/

[3] http://www.wood-database.com/western-hemlock/

[4] SHR report 15.0252 Testing to EN 310, Wood-based panels. Determination of modulus of elasticity in bending and of bending strength (http://www.shr.nl/)

[5] IFT report 535-37205/2 Testing to EN 320, Particleboards and fibreboards. Determination of resistance to axial withdrawal of screws (https://www.ift-rosenheim.de)

SUMMARY OF TEST REPORTS

Window or doorset	Product type	Test laboratory	UKAS accredited	Report Number	Date of test	Test standard	Full or partial test
Window	Top-hung, single casement	Wintech	2223	R15851	28/10/15 24/11/15	PAS24:2012	full
Window	Side-hung, single casement	Wintech	2223	R15534	28/10/15 08/11/15	PAS24:2012	full
Window	Side-hung, double casement	BSI	0135	8506223	21/03/2016	PAS24:2012	full
Window	Side-hung, single casement	MACO	No	15-1016	30/10/15	PAS24:2012	part
Window	Side-hung, single casement	MACO	No	15-1014	29/10/15	PAS24:2012	part
Window	Box sash window (weights and pullies)	Wintech	2223	R16581	14/06/16 18/06/16	PAS24:2012	full
Doorset	Single leaf, open-in	Wintech	2223	R15857	08/02/16	PAS24:2012	full
Doorset	Double leaf, open-out	Wintech	2223	R16155	27/04/16 28/04/16	PAS24:2012	full
Bi-fold Doorset	3+1	Wintech	2223	R16376	30/06/16 07/07/16	PAS24:2012	full

These tests were on windows manufactured from Redwood (average density 510 kg/m^3)

These tests were on windows manufactured from Accoya

TEST PROCEDURES FOR WINDOWS

C.4.3 Manipulation test

This test highlights any inherent vulnerability in the design of the window that would permit entry by the hardware being operated, released or disengaged from the outside.

C.4.2 Infill manual test

This test assesses the vulnerabilities of the infill retention system, including gaskets and beading.

C.4.3 Infill mechanical test

This test assesses the ability of the glazed unit to withstand a specified sequence of mechanically applied loads without permitting entry through the sample.

C.4.5 Mechanical loading test

A series of perpendicular to plane (opening) and parallel to plane (releasing) loads were applied progressively to assess the specimen's integrity during a specified sequence of loading.

C.4.6 Manual check test

This test assesses any vulnerabilities of the sample that are not covered by the standard loading cases assessed in the mechanical loading test C.4.5.

TEST PROCEDURES FOR DOORSETS

B.4.3 – Manipulation test

This test highlights any inherent vulnerability in the design of the window that would permit entry by the hardware being operated, released or disengaged from the outside

B.4.4.2 – Manual infill test

This test assesses the vulnerabilities of the infill retention system, including gaskets and beading.

B.4.4.3 – Mechanical infill test

This test assesses the ability of the glazed unit to withstand a specified sequence of mechanically applied loads without permitting entry through the sample.

B.4.4.4 – Manual cutting test

The objective of this test was to cut an aperture in the infill or fabric of the door leaf

B.4.5 – Mechanical loading test

This test assesses the ability of the sample to withstand a specified sequence of loading without gaining entry through the sample.

B.4.6 – Manual check test

This test assesses any vulnerabilities of the sample that are not covered by the standard loading cases assessed in the mechanical loading test B.4.5.

B.4.8 – Soft body impact test

This test assesses the ability of the sample to resist impacts using a soft body impactor at various impact locations.

B.4.9 – Hard body impact test

This test assesses the ability of the hardware, infill medium and its retention system to resist impacts using a hard body impactor at various locations.

A.3 – Security hardware & cylinder test

This test assesses the lock and cylinder and its resistance to manual attack. The test is undertaken in two parts:

Part 1 – the hardware is attacked for a total of 3 minutes in the following manner,

i. Attempts to remove, dislodge or otherwise gain access to the cylinder and lock by attacking any protective item
ii. Attempts to break or defeat the cylinder by applying a twisting or bending force
iii. Attempts to operate any accessible mechanism to gain entry

Part 2 – the hardware is attacked for a total of 3 minutes in the following manner,

i. Attempts to remove, dislodge or otherwise gain access to the cylinder and lock by attacking any protective item
ii. Attempts to screw self-cutting screws in to the exposed part of the cylinder to provide a suitable fixing force for activity iii.
iii. Attempts to break and defeat the cylinder by applying a nominally axial force to the screw using a hooked head crowbar attachment
iv. Attempts to operate any accessible mechanism to gain entry

TOP-HUNG CASEMENT - REDWOOD

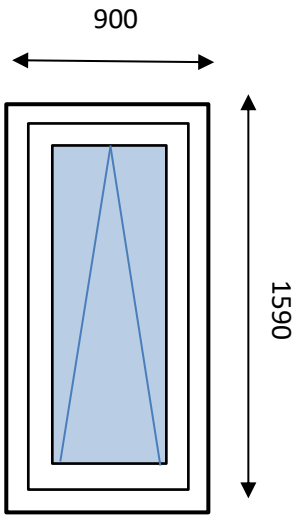

Test report – Wintech – R15851

Test conducted at:

Wintech Engineering Limited
Halesfield 2
Telford
Shropshire
TF7 4QH

Overall size of window tested, 900 wide x 1590 high

Top-hung, single opening casement.

Overall Classification in accordance with PAS 24:2012 – WK

Sponsor	Sponsor	Sponsor
Coastal Group Unit 3 Bojea Industrial Estate St Austel PL25 5RJ		

Test from PAS24:2012	Description	Result
C.4.3	Manipulation Test	Pass
C.4.4.2	Infill Manual Test	Pass
C.4.4.3	Infill Mechanical Test	Pass
C.4.5	Mechanical Loading Test	Pass
C.4.6	Manual Check Test	Pass

	Hardware			Fixings		
Hinges	Defender friction hinge	1 pair	DT24	4 x 40mm Redhorse TX20 screw thread cut	10	RHF440
Hinge protector	Hinge protector	1 pair	LCS20	4 x 40mm Redhorse TX20 screw thread cut	4	RHF440
Multipoint lock	EBT espagnolette bolt	1	EBT800	4 x 30mm Redhorse TX20 screw thread cut	6	RHF430
Operating handle	Kuhlen window handle	1	EH20	M5 x 40mm machine screw	2	FX1040
Keeps	EBTK night vent keep	3	EBTK	4 x 40mm Redhorse TX20 screw thread cut	6	RHF440
Stabilising plates	Stabilising plate	4	LCS50	Not Listed		

SECTION DETAILS

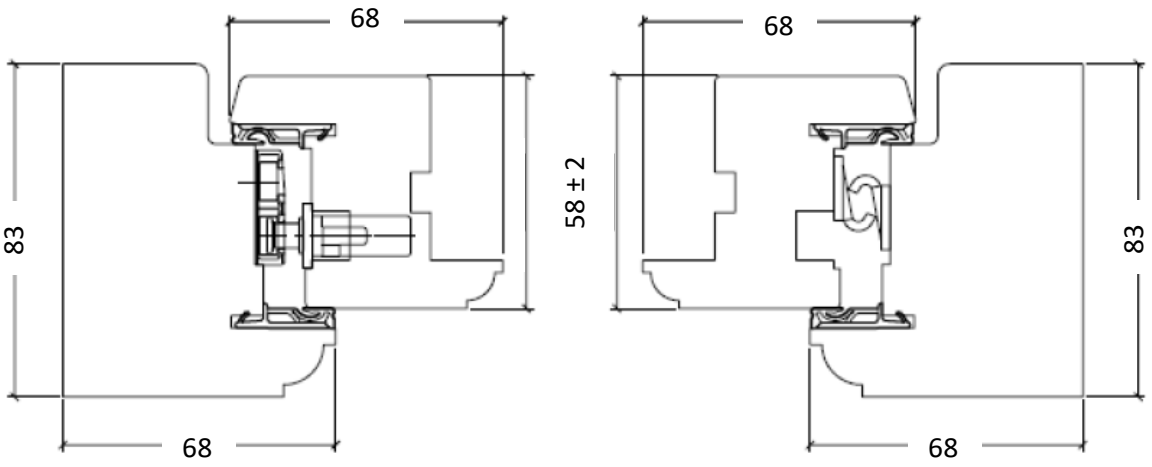

Horizontal Section

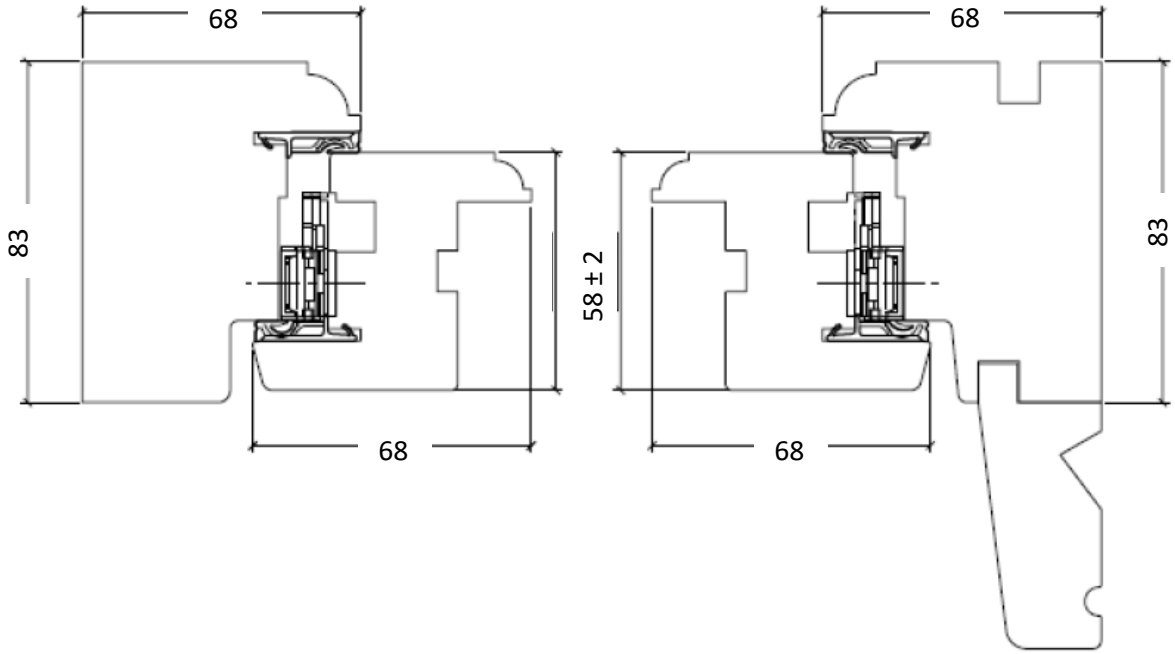

Vertical Section

SIDE-HUNG CASEMENT - REDWOOD

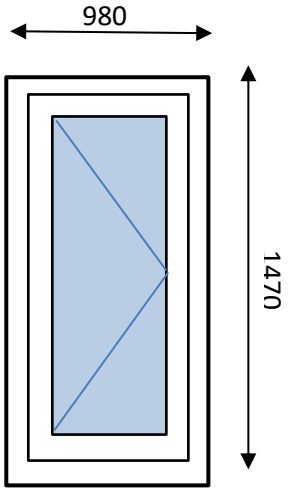

Test report – Wintech – R15534

Test conducted at:

Wintech Engineering Limited
Halesfield 2
Telford
Shropshire
TF7 4QH

Overall size of window tested, 980 wide x 1470 high

Side-hung, single opening casement.

Overall Classification in accordance with PAS 24:2012 – WK

Sponsor	Sponsor	Sponsor
Coastal Group Unit 3 Bojea Industrial Estate St Austel PL25 5RJ		

Test from PAS24:2012	Description	Result
C.4.3	Manipulation Test	Pass
C.4.4.2	Infill Manual Test	Pass
C.4.4.3	Infill Mechanical Test	Pass
C.4.5	Mechanical Loading Test	Pass
C.4.6	Manual Check Test	Pass

	Hardware (Supplied by Coastal Group)			Fixings		
Hinges	Sumo friction hinge	1 pair	DX330	4 x 40mm Redhorse TX20 screw thread cut	10	RHF440
Hinge protector	Hinge protector	1 pair	LCS20	4 x 40mm Redhorse TX20 screw thread cut	4	RHF440
Multipoint lock	EBT Tricoat espagnolette bolt	1	EBT1200	4 x 30mm Redhorse TX20 screw thread cut	8	RHF430
Operating handle	Kuhlen window handle	1	EH20	M5 x 40mm machine screw	2	FX1040
Keeps	EBT Tricoat night vent keep	3	EBTK	4 x 40mm Redhorse TX20 screw thread cut	6	RHF440
Stabilising plates	Stabilising plate	4	LCS50	Not listed		

SECTION DETAILS

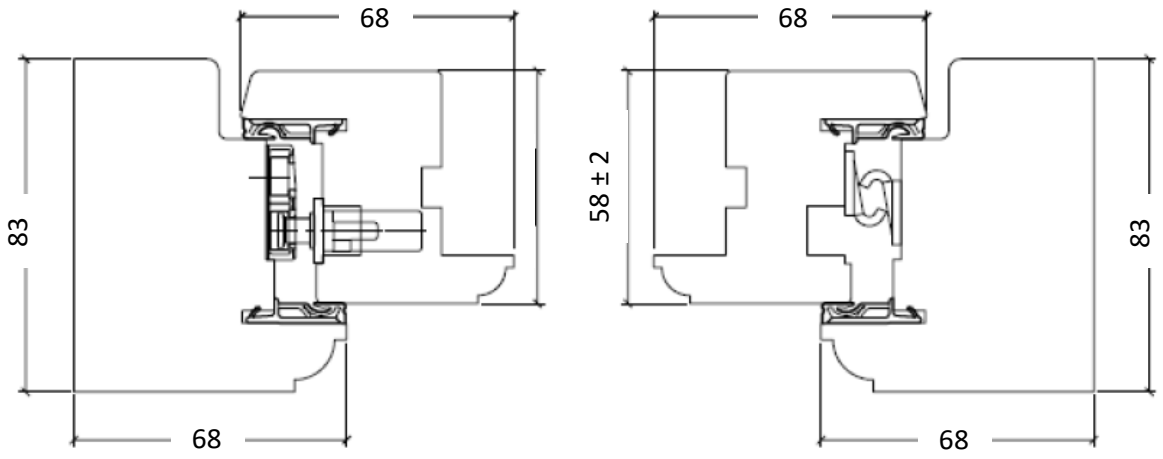

Horizontal Section

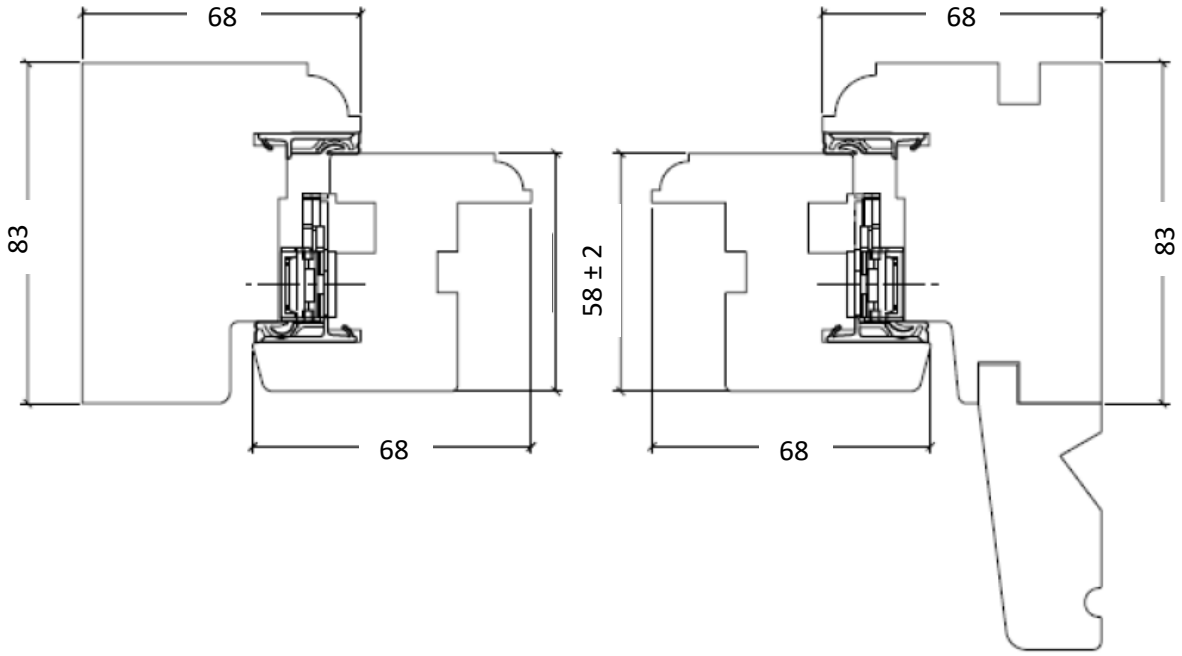

Vertical Section

DOUBLE SIDE-HUNG CASEMENT - ACCOYA

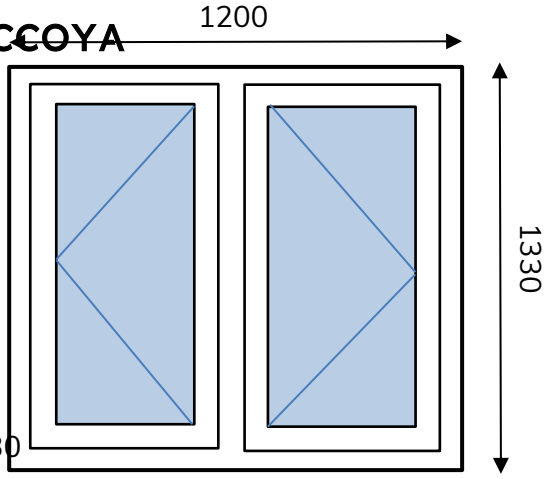

Test report – BSI – Report 8506223

Test conducted at:

Kitemark House
Maylands Avenue
Hemel Hempstead
Hertfordshire
HP2 4SQ
Overall size of window tested, 1200 wide x 1330 high

Overall Classification in accordance with PAS 24:2012 – WK

Sponsor	Sponsor	Sponsor
Coastal Group Unit 3 Bojea Industrial Estate St Austel PL25 5RJ	Accsys Brettenham House 19 Lancaster Place London WC2E 7EN	Whitehill Spindle Tools 2 Bolton Road Luton LU1 3HR

Test from PAS24:2012	Description	Result
C.4.3	Manipulation Test	Pass
C.4.4.2	Infill Manual Test	Pass
C.4.4.3	Infill Mechanical Test	Pass
C.4.5	Mechanical Loading Test	Pass
C.4.6	Manual Check Test	Pass
C.4.7	Additional Mechanical loading test	No alternative method of entry identified in C.4.6

	Hardware (Supplied by Coastal Group)			Fixings		
Hinge	16" Securistyle defender side hung stays	2 pairs		4 x 40mm Redhorse TX20 screw thread cut		
Hinge protection	Vector Excluder hinge protector	2 pairs		4 x 40mm Redhorse TX20 screw thread cut		
Multipoint lock	MACO MK1 shootbolt	1		4 x 30mm Redhorse TX20 screw thread cut	8	
Operating handle	Kuhlen window handle	1		M5 x 40mm machine screw	2	
keeps	MACO mushroom striker	3		4 x 40mm Redhorse TX20 screw thread cut	6	
Stabilising plates	Stabilising plate	4		Not Listed		
Glazing tape	Confirm Security glazing tape 1.5mm x 10mm					

SECTION DETAILS

Not provided

SIDE-HUNG CASEMENT - ACCOYA

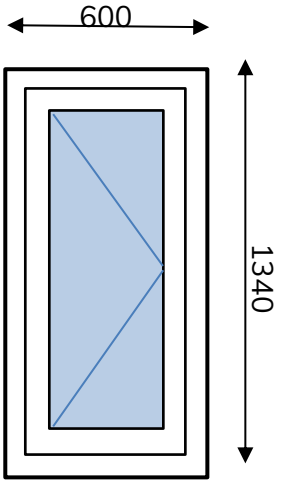

Test report – MACO PAS24:2012 15-1014

Partial test to PAS24:2012

Test conducted at:

MACO Door & Window Hardware (UK) Ltd
Eurolink Industrial Centre
Castle Road
Sittingbourne
Kent
ME10 3LY

Overall size of window tested, 600 wide x 1340 high

Overall Classification in accordance with PAS 24:2012 – WK

Sponsor	Sponsor	Sponsor
Coastal Group Unit 3 Bojea Industrial Estate St Austel PL25 5RJ	Accsys Brettenham House 19 Lancaster Place London WC2E 7EN	Westgate Joinery Sycamore House Laughton Road Ringmer East Sussex BN8 5SY

Test from PAS24:2012	Description	Result
C.4.3	Manipulation Test	Pass
C.4.4.2	Infill Manual Test	Not done
C.4.4.3	Infill Mechanical Test	Not done
C.4.5	Mechanical Loading Test	Pass
C.4.6	Manual Check Test	Pass

	Hardware (Supplied by Coastal Group)			Fixings		
Hinges	MACO friction hinges	1 pair				
Hinge protector						
Multipoint lock	MACO RAIL espagnolette	1	202704			
Operating handle						
Keeps	MACO mushroom striker	3	359381			
Stabilising plates						

SECTION DETAILS

Not provided

SIDE-HUNG CASEMENT - ACCOYA

68

Test report – MACO PAS24:2012 15-1014

Partial test to PAS24:2012

Test conducted at:

MACO Door & Window Hardware (UK) Ltd
Eurolink Industrial Centre
Castle Road
Sittingbourne
Kent
ME10 3LY

Overall size of window tested, 600 wide x 1340 high

Overall Classification in accordance with PAS 24:2012 – WK

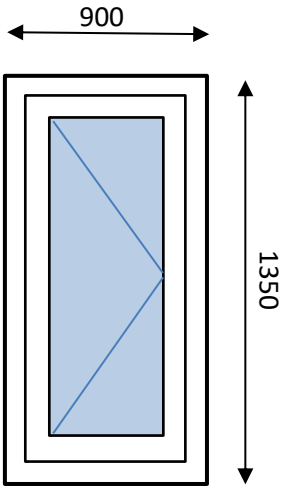

Sponsor	Sponsor	Sponsor
Coastal Group Unit 3 Bojea Industrial Estate St Austel PL25 5RJ	Accsys Brettenham House 19 Lancaster Place London WC2E 7EN	Wyre Forest Woodcraft Oldington Lane Firs Industrial Estate Kidderminster Worcerstershire DY11 7QN

Test from PAS24:2012	Description	Result
C.4.3	Manipulation Test	Pass
C.4.4.2	Infill Manual Test	Not done
C.4.4.3	Infill Mechanical Test	Not done
C.4.5	Mechanical Loading Test	Pass
C.4.6	Manual Check Test	Pass

	Hardware (Supplied by Coastal Group)			Fixings		
Hinges	Butt hinges, 90mm, lift-off	3 hinges				
Hinge protector						
Multipoint lock	MACO RAIL espagnolette	1	202716			
Operating handle						
Keeps	MACO mushroom striker	3	359084			
Stabilising plates						

SECTION DETAILS

Not provided

VERTICAL SLIDING SASH - ACCOYA

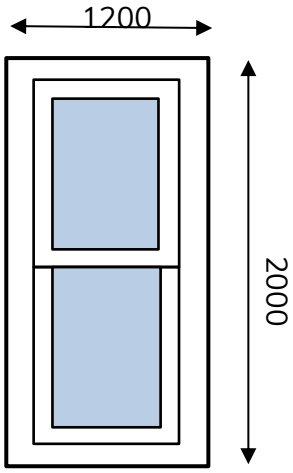

Box sash with weights and pulleys

Test report – Wintech – R16581

Test conducted at:

Wintech Engineering Limited
Halesfield 2
Telford
Shropshire
TF7 4QH

Overall size of window tested, 1200 wide x 2000

high Overall Classification in accordance with PAS

24:2012 – WK

Note: This test report only supports the performance to PAS 24:2012 when the window is installed behind the face brickwork allowing the brickwork to conceal and support the weights boxes.

Sponsor	Sponsor	Sponsor
Coastal Group Unit 3 Bojea Industrial Estate St Austel PL25 5RJ	Accsys Brettenham House 19 Lancaster Place London WC2E 7EN	Westgate Joinery Sycamore House Laughton Road Ringmer East Sussex BN8 5SY

Test from PAS24:2012	Description	Result
C.4.3	Manipulation Test	Pass
C.4.4.2	Infill Manual Test	Pass
C.4.4.3	Infill Mechanical Test	Pass
C.4.5	Mechanical Loading Test	Pass
C.4.6	Manual Check Test	Pass

	Hardware (Supplied by Coastal Group)			Fixings		
Sash Fastener	GL45 claw sash fastener	2		Redhorse screws		
Sash pulleys	F&B ball bearing pulley	4	SPS70-SC	Redhorse screws		

SECTION DETAILS

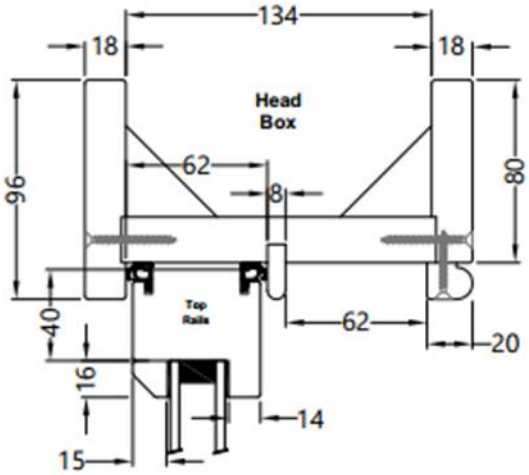

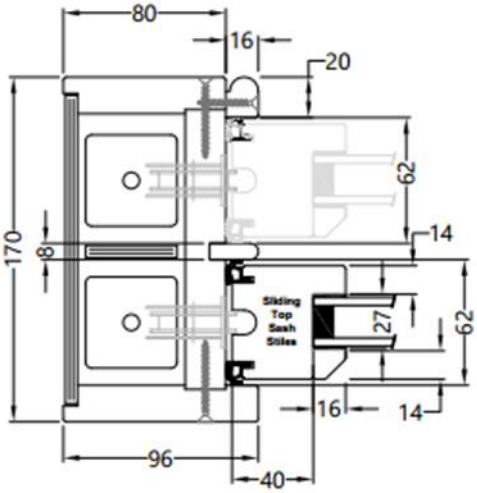

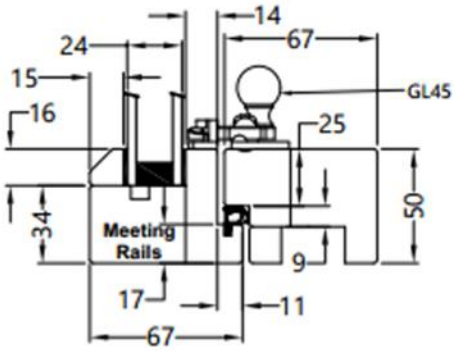

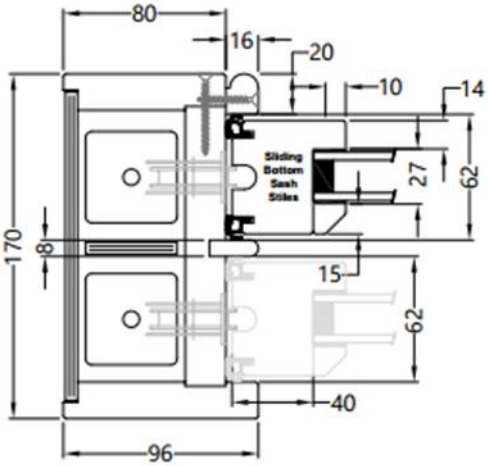

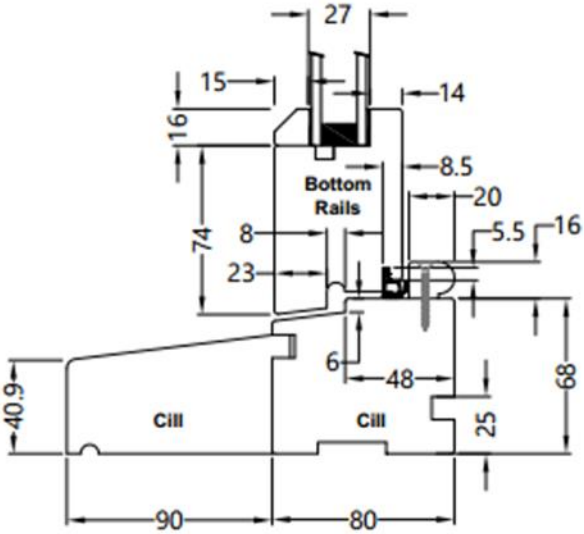

Vertical Section

SINGLE LEAF DOORSET, OPEN-IN - ACCOYA

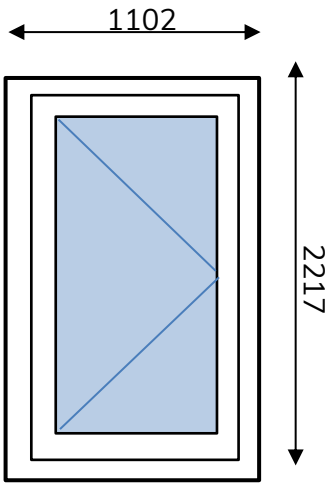

Test report – Wintech (UKAS 2223) – R15857

Test conducted at:

Wintech Engineering Limited
Halesfield 2
Telford
Shropshire
TF7 4QH

Overall size of window tested, 1102 wide x 2217 high

Overall Classification in accordance with PAS 24:2012 – DKT

Sponsor	Sponsor	Sponsor
Coastal Group Unit 3 Bojea Industrial Estate St Austel PL25 5RJ	Accsys Brettenham House 19 Lancaster Place London WC2E 7EN	Wyre Forest Woodcraft Oldington Lane Firs Industrial Estate Kidderminster Worcerstershire DY11 7QN

Test from PAS24:2012	Description	Result
A.3	Security hardware & cylinder test	Pass
B.4.6	Manual check test	Pass
B.4.4.3	Mechanical infill test	Pass
B.4.3	Manipulation test	Pass
B.4.5	Mechanical loading test	Pass
B.4.4.2	Manual infill test	Pass
B.4.4.4	Manual cutting test	Pass
B.4.8	Soft body impact test	Pass
B.4.9	Hard body impact test	Pass

	Hardware (Supplied by Coastal Group)			Fixings		
Hinges	4” bronze washered	3 hinges	HQ4-316-SSS	5 x 40mm Redhorse TX20 screw thread cut	24	RHF540
Hinge protector	Security dog bolt	2	HB740	4 x 40mm Redhorse TX20 screw thread cut	4	RHF440
Multipoint lock	ML 60/66 twin tapered deadbolt	1	ML60/66	4 x 30mm Redhorse TX20 screw thread cut	8	RHF430
Operating handle	Kuhlen window handle	1	EH20	M5 x 40mm machine screw	2	FX1040
Keeps	MK9 centre keep MK7 single keeps	1 2	EBTK	4 x 40mm Redhorse TX20 screw thread cut	10	RHF440
Cylinder	40/40 3 star P-Extra Guard - thumbturn	1				
Threshold	78 x 15 low level, aluminium		TSY3/TSW3			

SECTION DETAILS

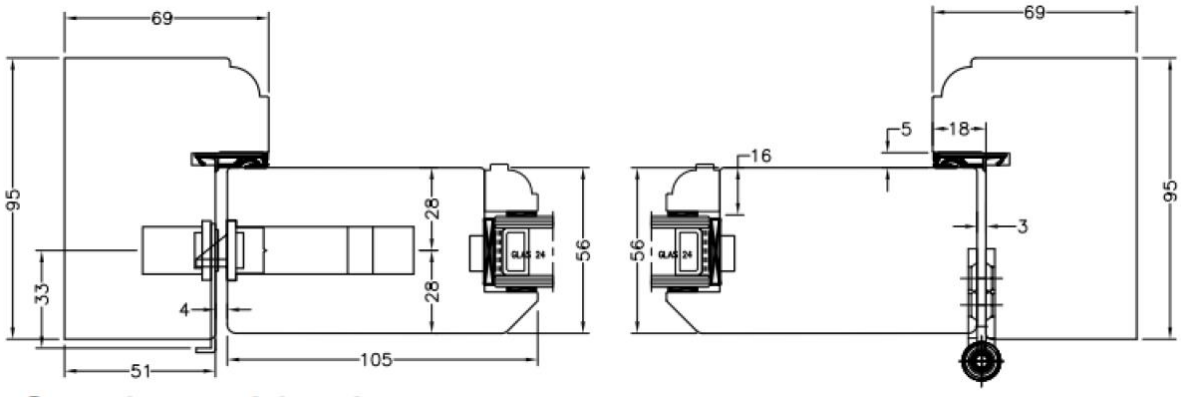

Horizontal Section, glazed condition

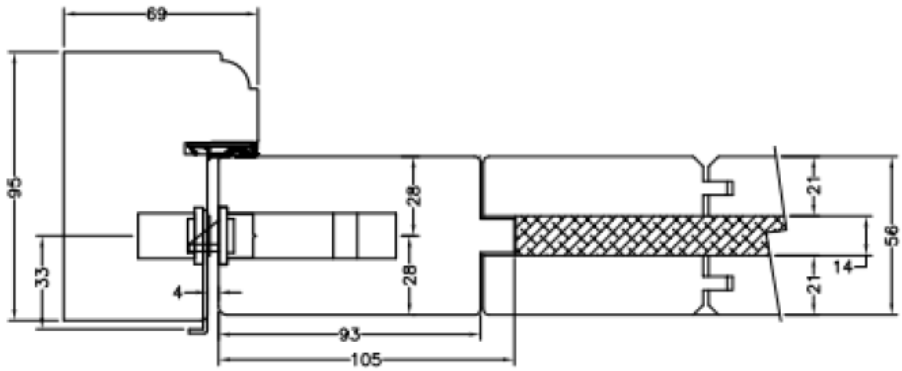

Horizontal Section, panelled condition

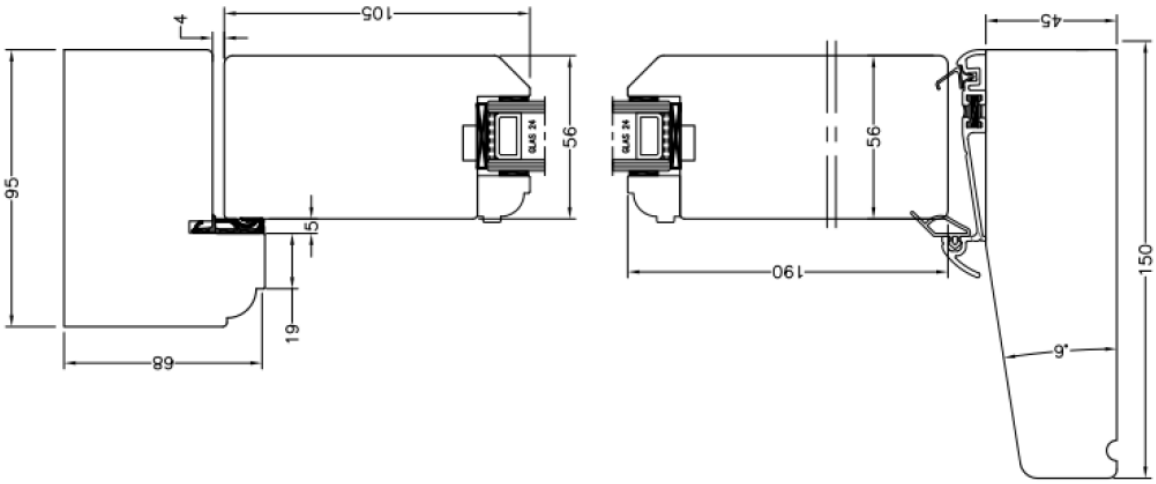

Vertical Section

DOUBLE LEAF DOORSET, OPEN-OUT - ACCOYA

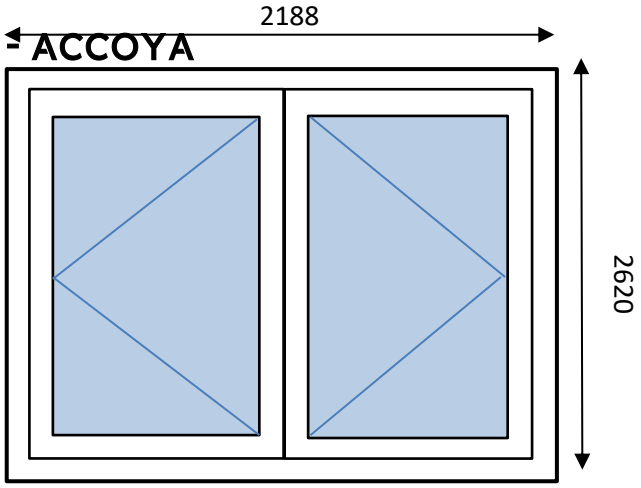

Test report – Wintech – R16155

Test conducted at:

Wintech Engineering Limited
Halesfield 2
Telford
Shropshire
TF7 4QH

Overall size of doorset tested,

2188 wide x 2620 high Overall Classification in accordance with PAS 24:2012 – DK

Sponsor	Sponsor	Sponsor
Coastal Group Unit 3 Bojea Industrial Estate St Austel PL25 5RJ	Accsys Technologies Brettenham House 19 Lancaster Place London WC2E 7EN	Wyre Forest Woodcraft Oldington Lane Firs Industrial Estate Kidderminster Worcerstershire DY11 7QN

Test from PAS24:2012	Description	Result
A.3	Security hardware & cylinder test	Pass
B.4.6	Manual check test	Pass
B.4.4.3	Mechanical infill test	Pass
B.4.3	Manipulation test	Pass
B.4.5	Mechanical loading test	Pass
B.4.4.2	Manual infill test	Pass
B.4.4.4	Manual cutting test	Not tested
B.4.8	Soft body impact test	Pass
B.4.9	Hard body impact test	Pass

	Hardware (Supplied by Coastal Group)			Fixings		
Hinges	4" bronze washered	3 hinges	HQ4-316-SSS	5 x 40mm Redhorse TX20 screw thread cut	24	RHF540
Hinge protector	Security dog bolt	2	HB740	4 x 40mm Redhorse TX20 screw thread cut	4	RHF440
Multipoint lock	Master leaf ML 60/66 twin tapered deadbolt Slave leaf ML30 slave lock	1 1	ML60/66 ML30	4 x 30mm Redhorse TX20 screw thread cut	8	RHF430
Operating handle	Jigsaw handle	1	JR095			
Keeps	Ferrell shootbolt keep	2	MS28	4 x 40mm Redhorse TX20 screw thread cut	10	RHF440
Cylinder	3 star TS007 Kaba	1	KPT4040			

SECTION DETAILS

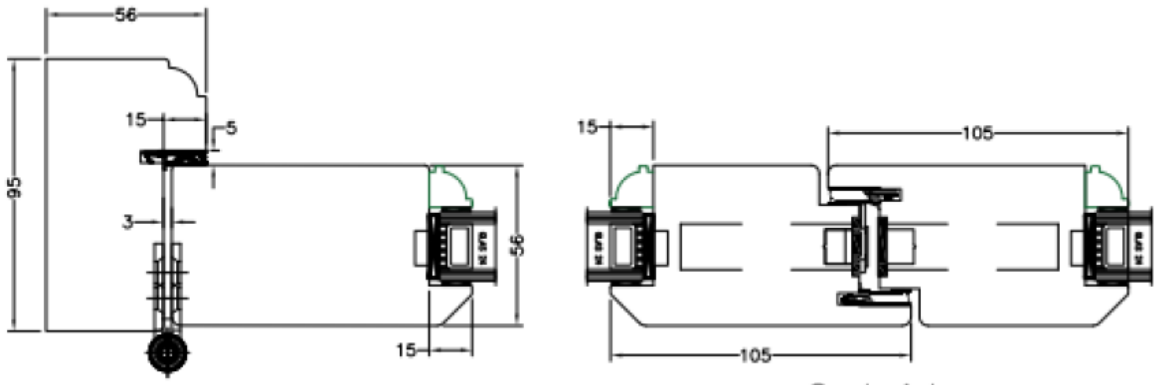

Horizontal Section

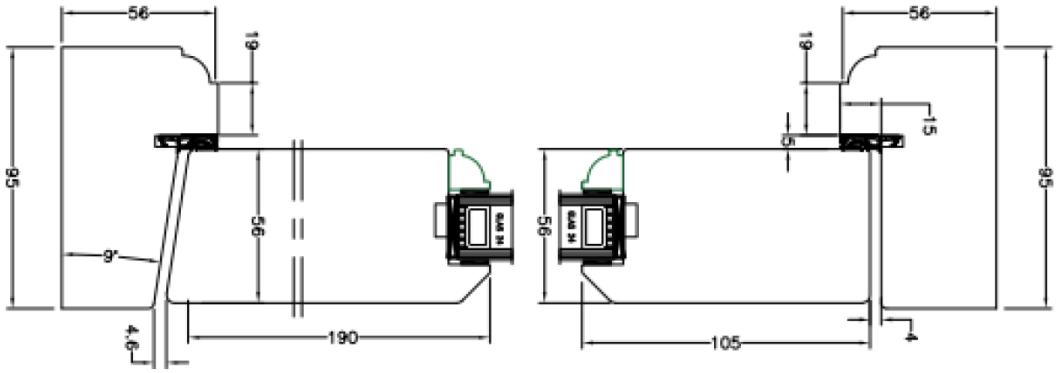

Vertical Section

BI-FOLD DOORSET – ACCOYA

Test report – Wintech – R16376

Test conducted at:

Wintech Engineering Limited
Halesfield 2
Telford
Shropshire
TF7 4QH

Overall size of bi-fold doorset tested,

3300 wide x 2300 high

Overall Classification in accordance with PAS 24:2012 – DK

Sponsor	Sponsor	Sponsor	Sponsor
P C Henderson Ltd Durham Road Bowburn County Durham DH6 5NG England	Coastal Group Unit 3 Bojea Industrial Estate St Austel PL25 5RJ	Accsys Brettenham House 19 Lancaster Place London WC2E 7EN	Wyre Forest Woodcraft Oldington Lane Firs Industrial Estate Kidderminster Worcerstershire DY11 7QN

Test Description	***Result***
A.3 – Security hardware & cylinder test	*Pass*
B.4.6 – Manual check test	*Pass*
B.4.4.3 – Mechanical infill test	*Pass*
B.4.3 – Manipulation test	*Pass*
B.4.5 – Mechanical loading test	*Pass*
B.4.4.2 – Manual infill test	*Pass*
B.4.8 – Soft body impact test	*Pass*
B.4.9 – Hard body impact test	*Pass*
Overall Classification in accordance with PAS 24:2012	*DK*

	Manufacturer:	Product description:	Product code:	Qty
Hinges:	PC Henderson	Hangers & Pivots	CF1, CF7, CF4	2
Hinge fixing:	Redhorse	Screw	RHF450	’
Hinge protectors:	None			
Hinge protector fixings:				
Door lock:	Winkhaus	Multipoint Lock	ML60	1
Door lock fixings:	Redhorse	Screw	RHF430	
Cylinder:	Kaba	3* Security Cylinder	KPD4040	1
Cylinder fixing:	Kaba	Cylinder Screw		1
Handle:	N/A			
Handle fixings:				
Touch Bar				
Cylinder Support				
Cylinder Escutcheon				
Keeps:	Winkhaus	Hook Keep/ Centre Keep	MK7/ MK9	
Keep fixings:	Redhorse	Screw	RHF430	
Drip bar:				
Drip bar fixings:				
Additional Hardware:	Yale	Dogbolt	HB740	4

I

COASTAL
JOINERY HARDWARE

CoFold Non-Mortice

Fitting Instructions for top hung exterior folding doors

Diagram 1

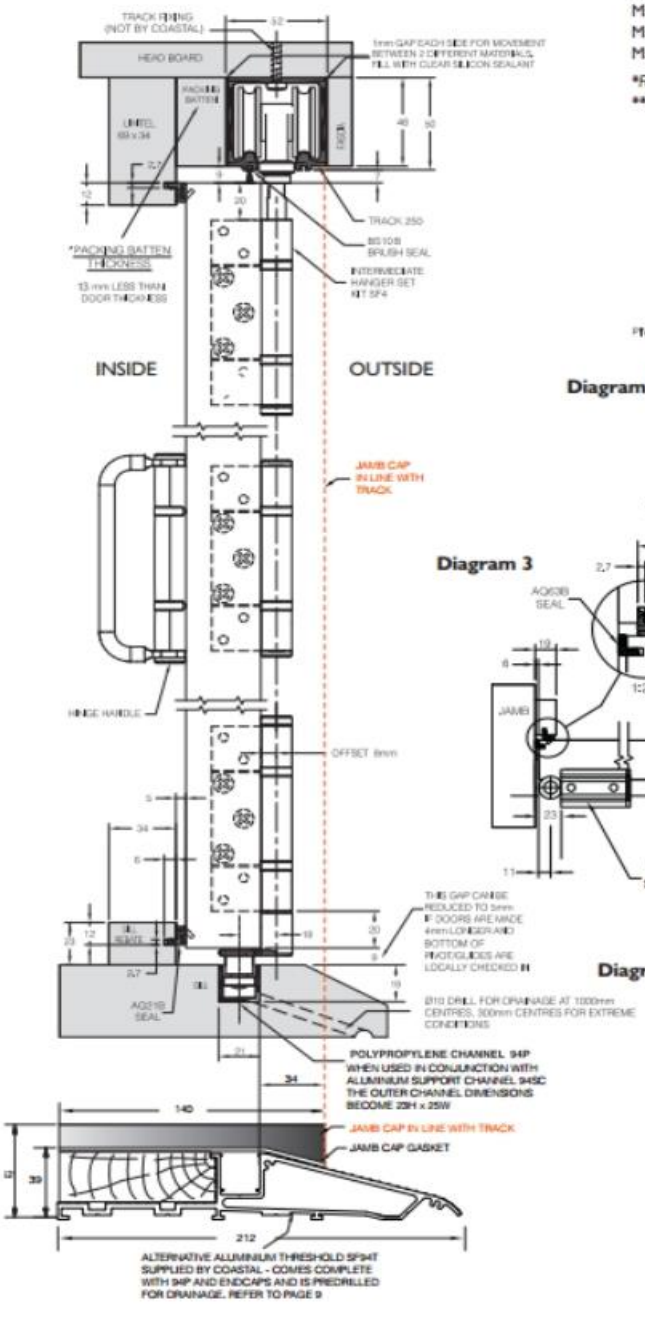

SYSTEM CAPACITY

Maximum leaf height	- 3300mm
Maximum leaf weight	- 100kg
Maximum leaf width	- 1000mm
Maximum leaf thickness	- 35-68mm*

*For thicker or thinner doors please contact technical@coastal-group.com.
**For doors between 35-44mm an alternative to the CoFold flushbolt is required.

Diagram 2

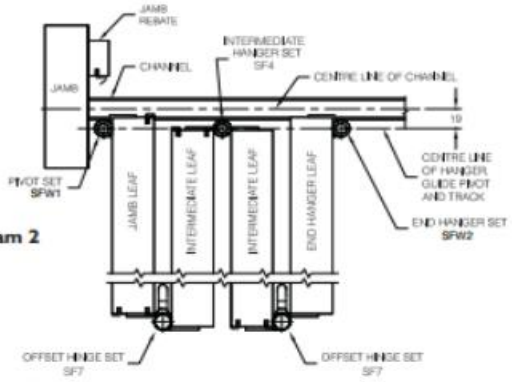

Diagram 3

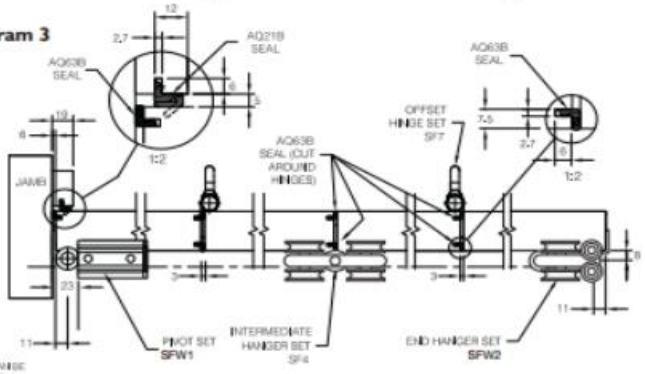

Diagram 4

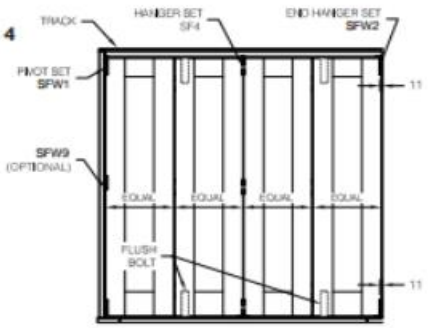

TYPICAL OUTSIDE ELEVATION

2

PREPARATION

SFW1 - Pivot Assembly Set
SFW2R - End Hanger Set Right Hand
SFW2L - End Hanger Set Left Hand
SF3 - Hinge Set with Handle
SF4 - Intermediate Hanger Set
SF5 - Hinge Set Inward Opening
SF6 - Hinge Set Offset Inward Opening
SF7 - Hinge Set Offset Outward Opening
SFW8 - Rebated End Hanger Meeting
SFW9 - Pivot Hinge for Doors Over 2200mm High (Optional)
SF10 - Face Fix Handle (Optional)

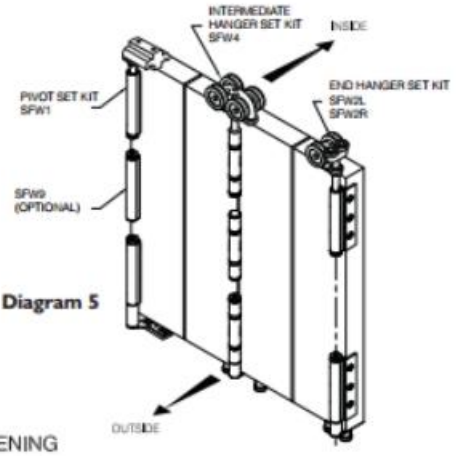

Diagram 5

Diagram 6

DOOR HARDWARE - KIT ORIENTATION, OUTWARD OPENING

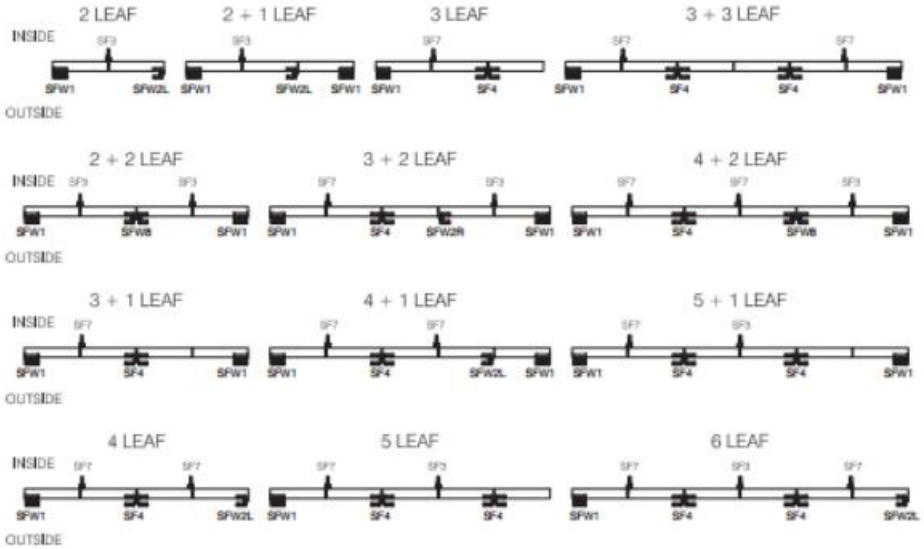

DOOR HARDWARE - KIT ORIENTATION, INWARD OPENING

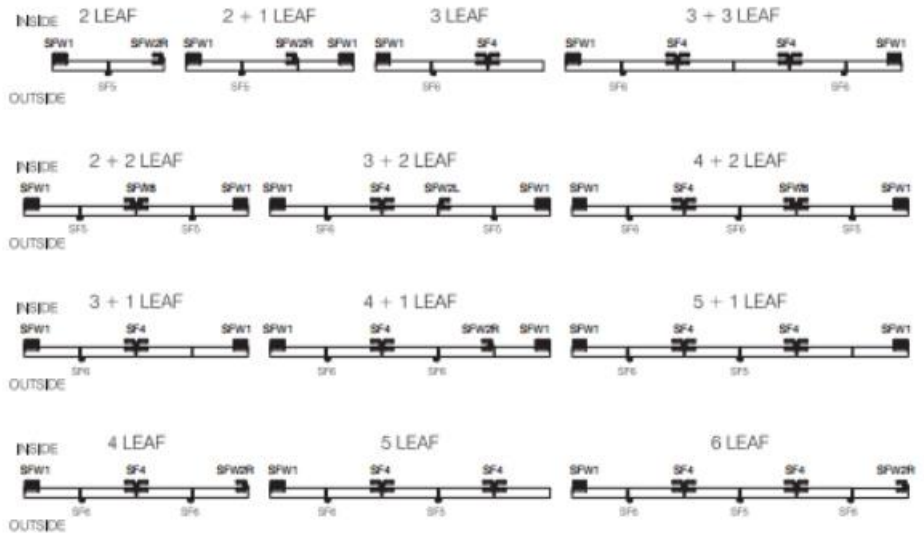

3

Preparing the opening

Ensure the opening is square and all load bearing areas are suitable for the weight of the system. Take particular care to ensure there is sufficient strength in the structure above the opening to take the concentrated weight of the doors, when in the open stacked position. The Cofold system provides +/- 5mm of horizontal adjustment. Use a plumb line to ensure that the centre line of the track and the centre line of the channel are offset by 19mm.

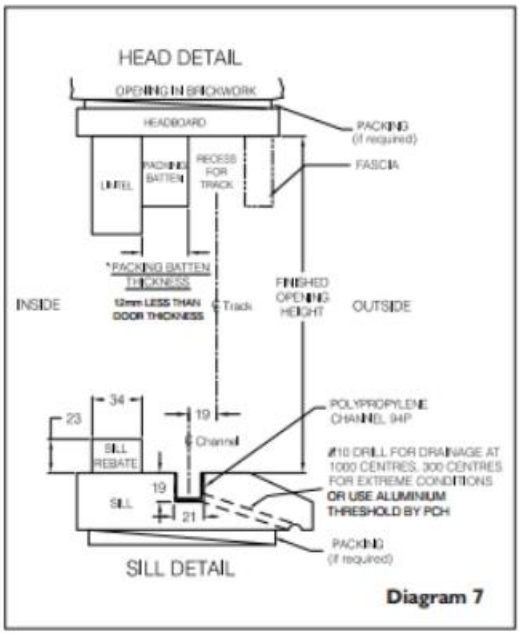

Diagram 7

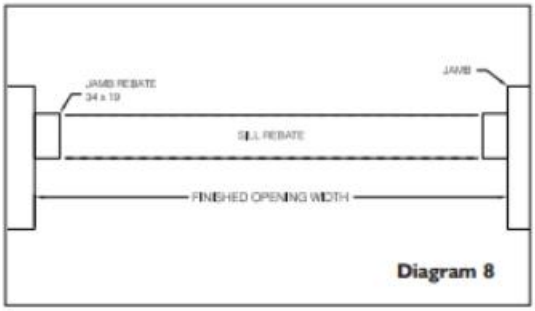

Diagram 8

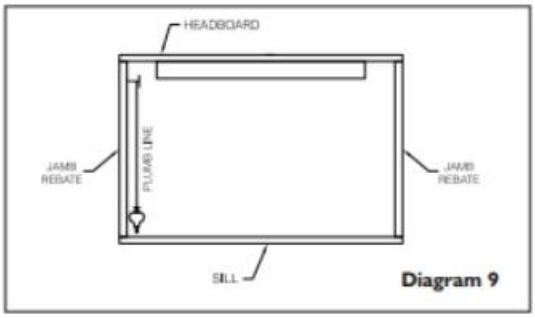

Diagram 9

Preparing the door frame

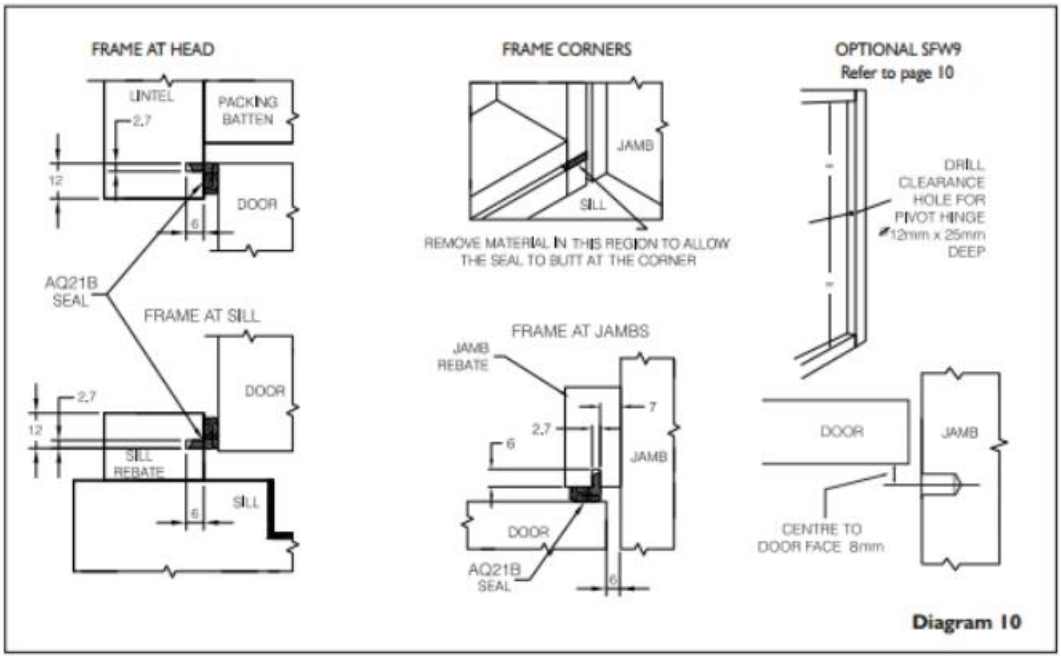

Diagram 10

4

Preparing the door leaves

Door leaf width calculation

1. Decide how many door leaves you want in the opening.
2. Add together all the 3mm clearances required between door leaves and 6mm between the door and the jambs (there will be one more than the number of door leaves). This is the total clearance figure.
3. Measure the finished opening width (W) and deduct from this the total clearance figure.
4. Divide this new figure (finished opening width minus total clearance) by the number of doors to produce the actual door width. (N.B. all doors with the Cofold system are the same width).

For example: For a 4 door leaf system with a finished opening width of 2345mm the door leaf width would be 2345mm minus (3x3mm) + (2x6mm) divided by 4 (number of door leaves) = 581mm.

Door leaf height calculation

Leaf height = finished opening height (see diagram 7) minus 66mm.

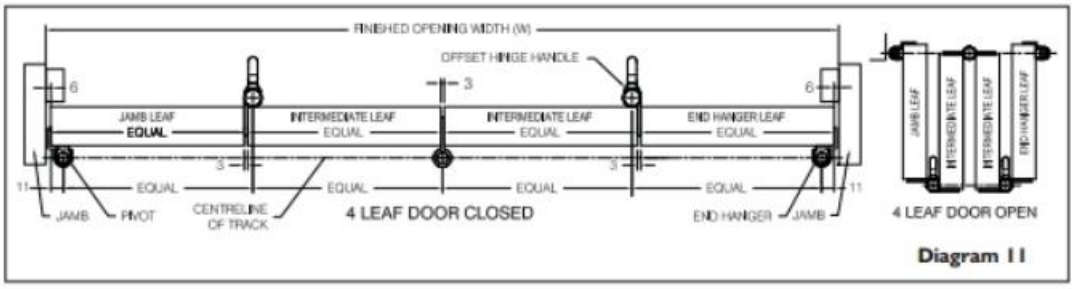

Diagram 11

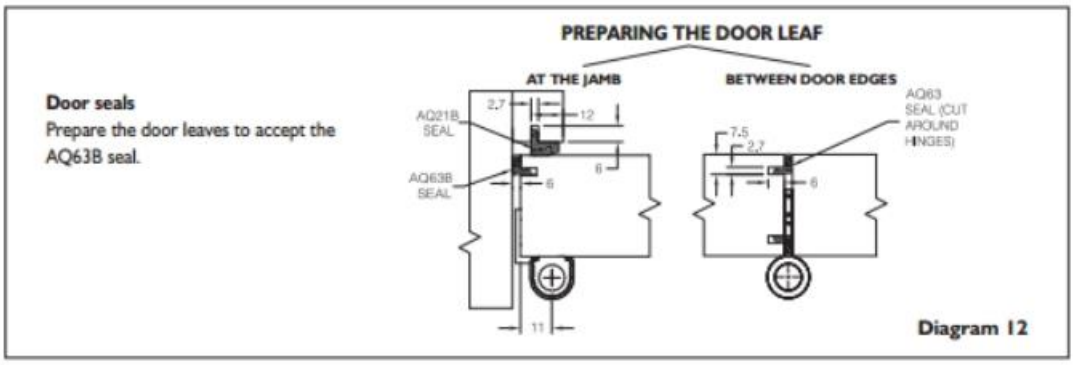

Door seals

Prepare the door leaves to accept the AQ63B seal.

Diagram 12

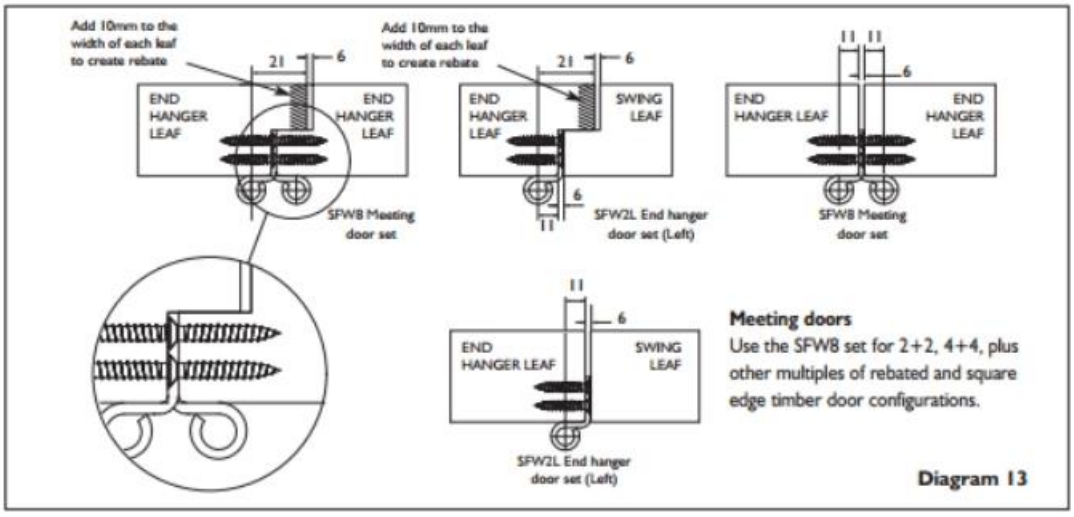

Meeting doors

Use the SFW8 set for 2+2, 4+4, plus other multiples of rebated and square edge timber door configurations.

Diagram 13

END OF REPORT

www.accoya.com

Contact; Mike Lewis, mike.lewis@accsysplc.com 07507 414485

www.bwf.org.uk

Contact; Kevin Underwood, kevin.underwood@bwf.org.uk 0844 209 2610

The British Woodworking Federation (BWF) is a business support organisation offering advice, support and wood industry information to over 700 members as well as guidance for customers who use, or specify, members' products and services. BWF provides a voice for thesector in the UK, influencing policy, regulations and standards.